Exhaust system for Atomic 4 in Alberg 30

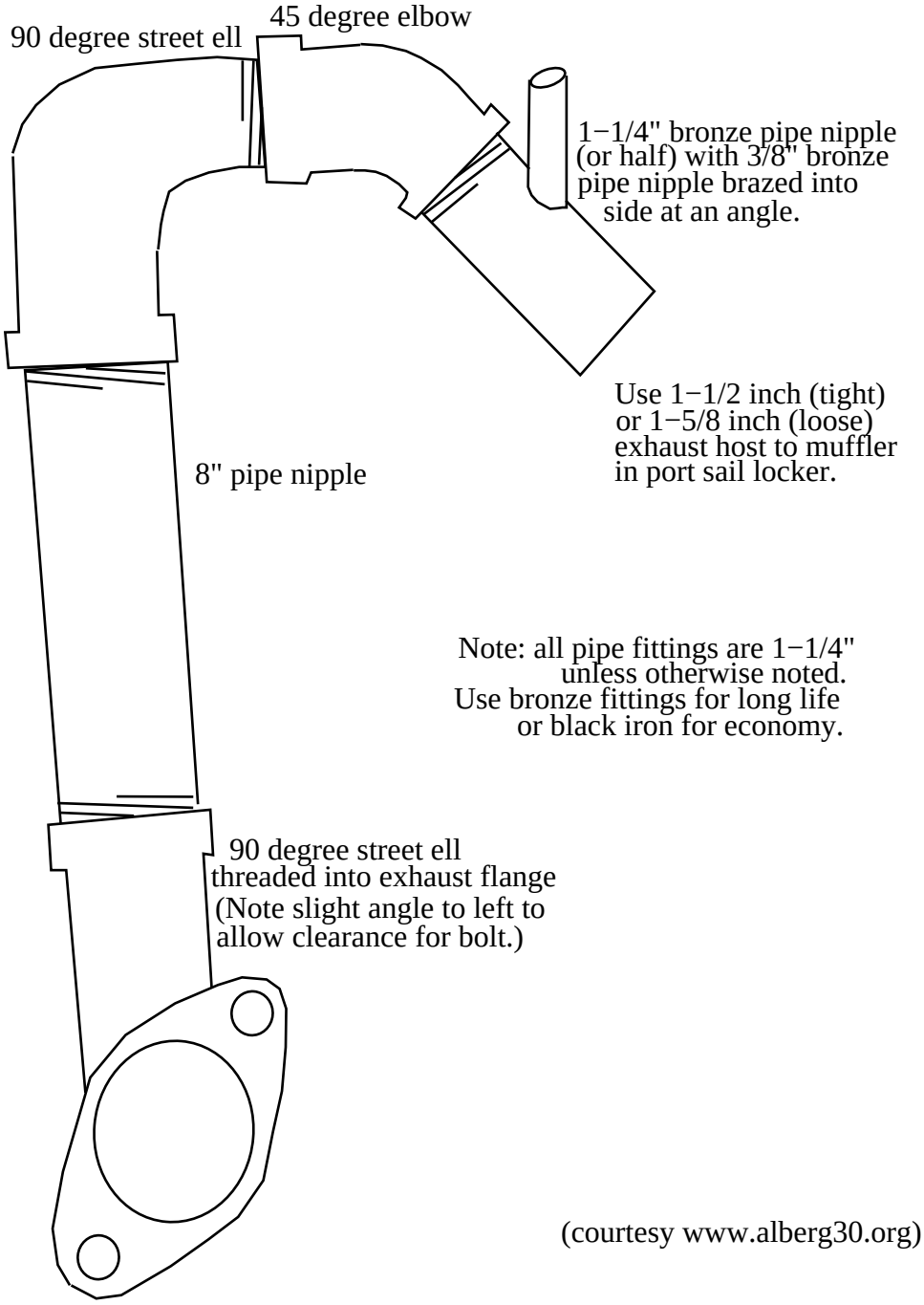

(courtesy www.alberg30.org)